BM 1 Professional

Robert Bosch Power Tools GmbH
70538 Stuttgart
Germany
www.bosch-pt.com
1 609 92A 2ZP (2013.09) T / 2

1 609 92A 2ZP

BOSCH

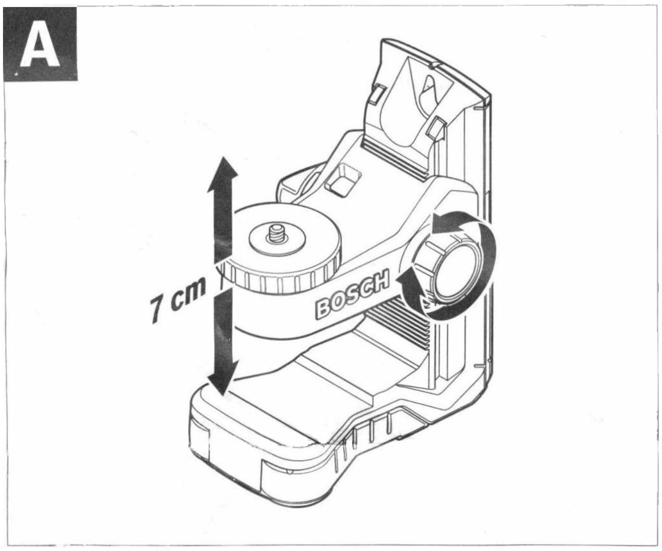

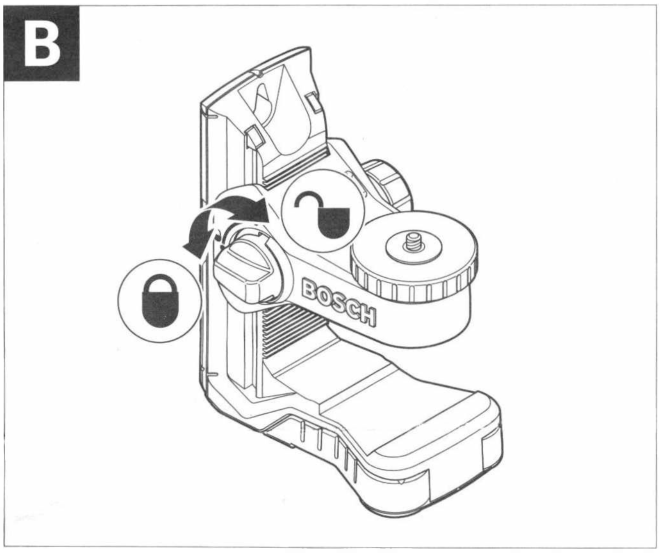

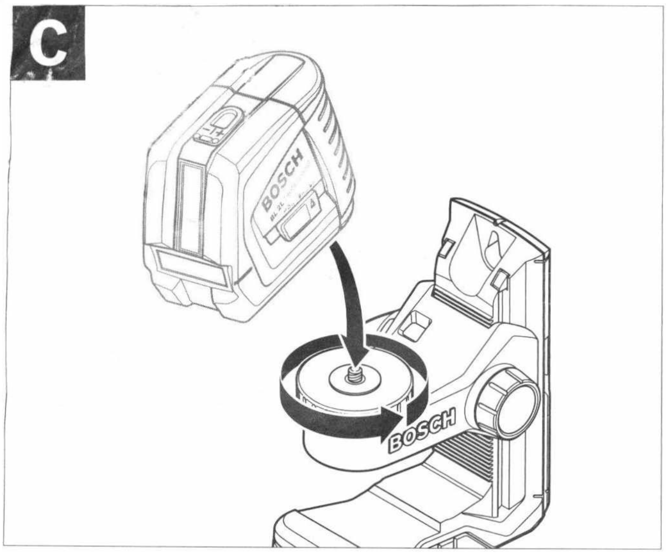

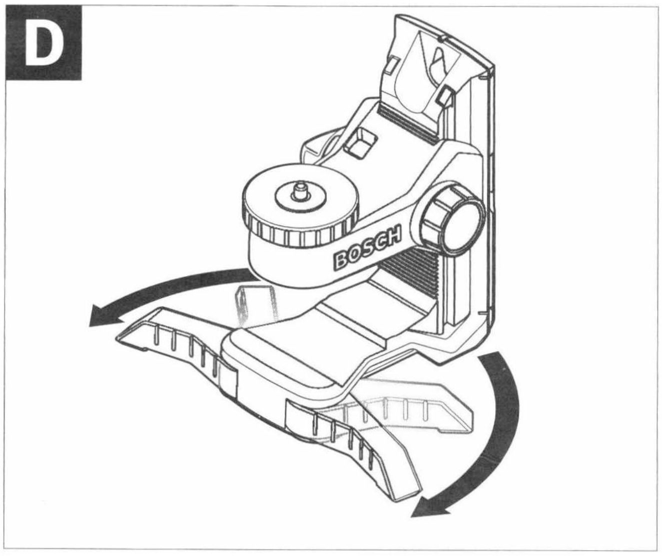

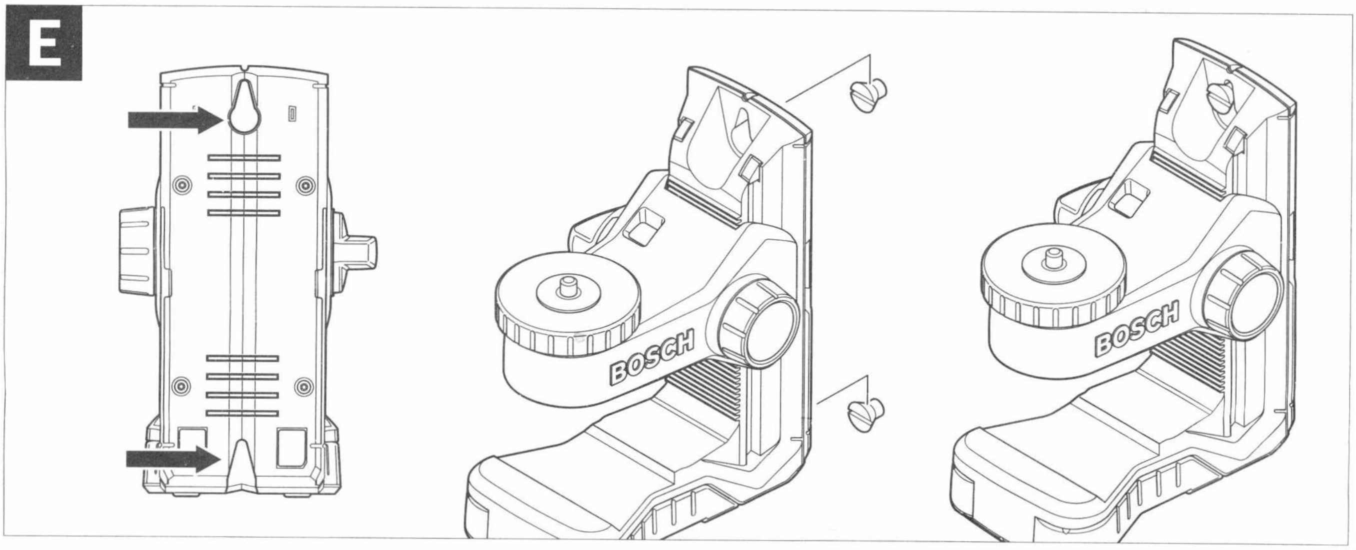
E
BOSCH
BOSCH

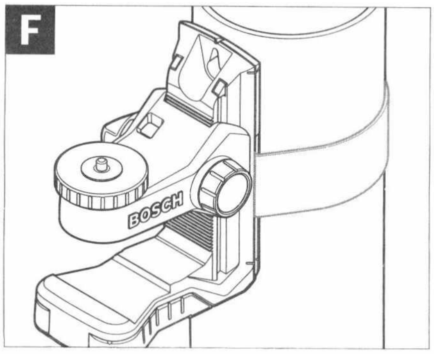
F
BOSCH

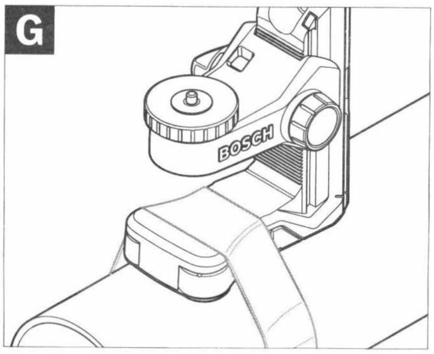
G
BOSCH

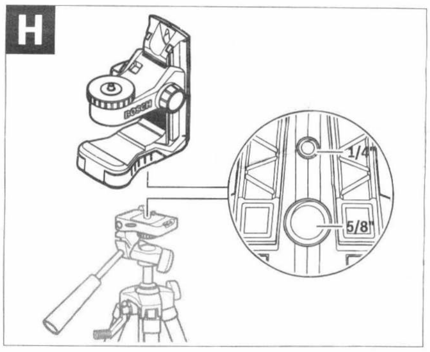
H
1/4"
5/8"

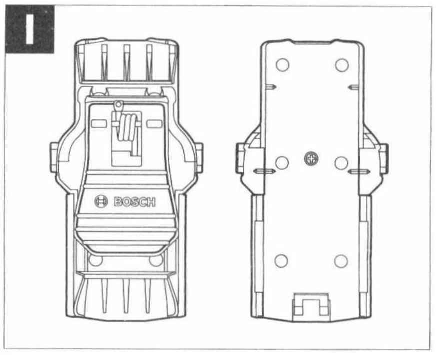
I
BOSCH

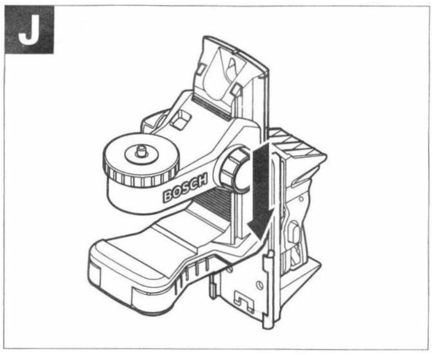
J
BOSCH

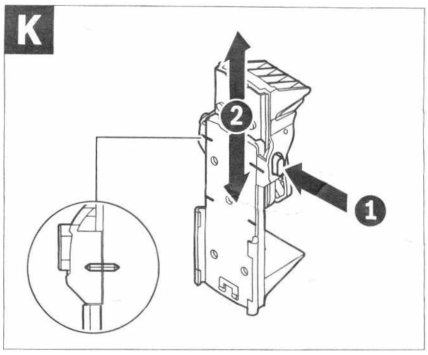
K
2
1

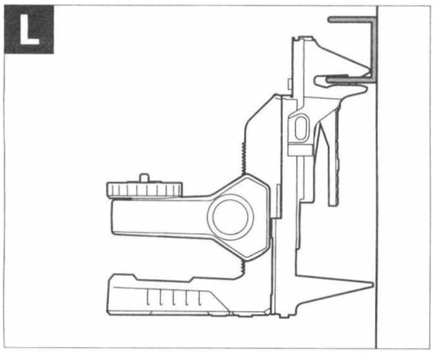
L

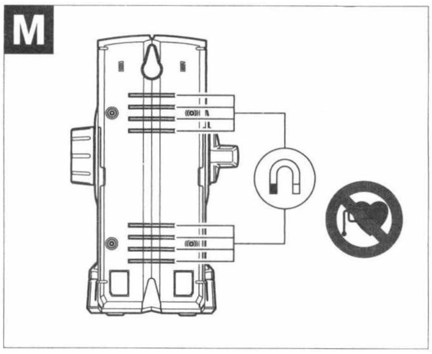
M